RoHS Compliant & Pb Free Product

MC1-MU07A:

- Category: Multiplier
- Device Package: MSOP-8
- Cell Size: Single (1x1)
- PCB Material/Layer Details: RO4350/Single layer with thickness 0.020”

Supported Device Package and Its Pin Allocation:

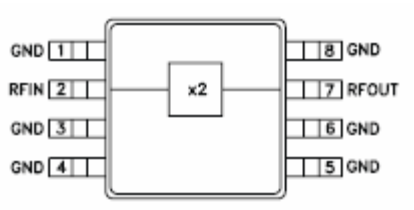

HMC187MS8
HMC188MS8
HMC189MS8
HMC204MS8G

Schematic:

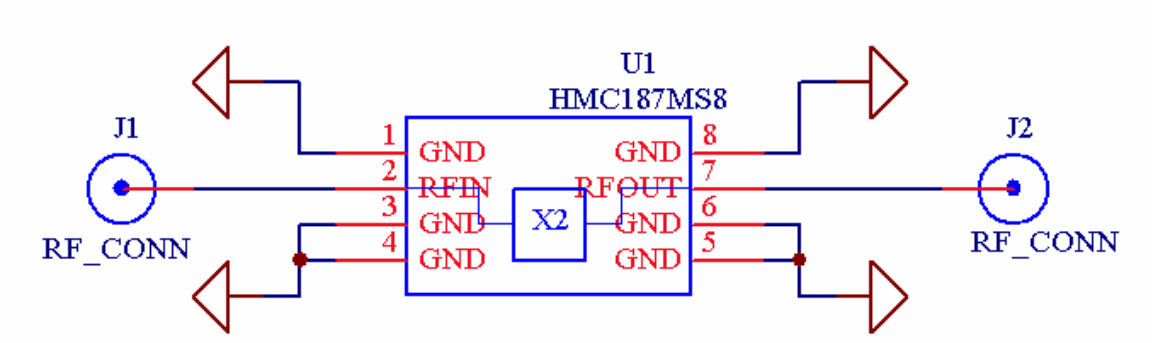

MC1-MU07A PCB Layout:

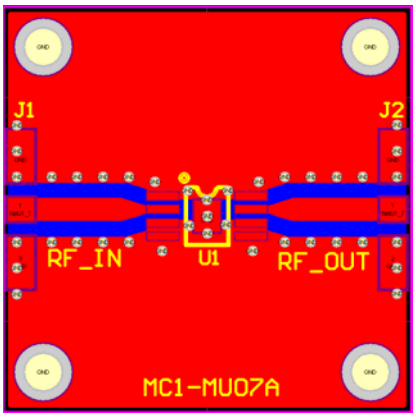

MC1-MU07A Assembly Drawing:

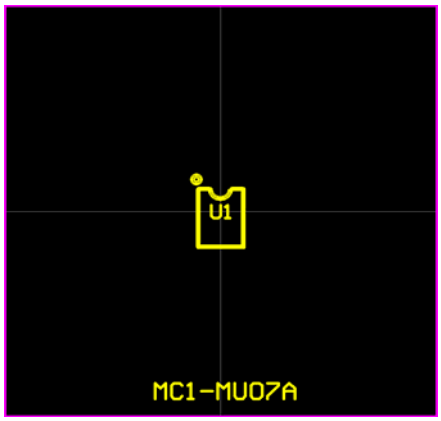

Minimum supported devices and its vendors:

Hittite
HMC187MS8 HMC188MS8 HMC189MS8 HMC204MS8G

Bill of Material Example:

Used	Part Type	Designator	Footprint
1	HMC187MS8	U1	MS8G